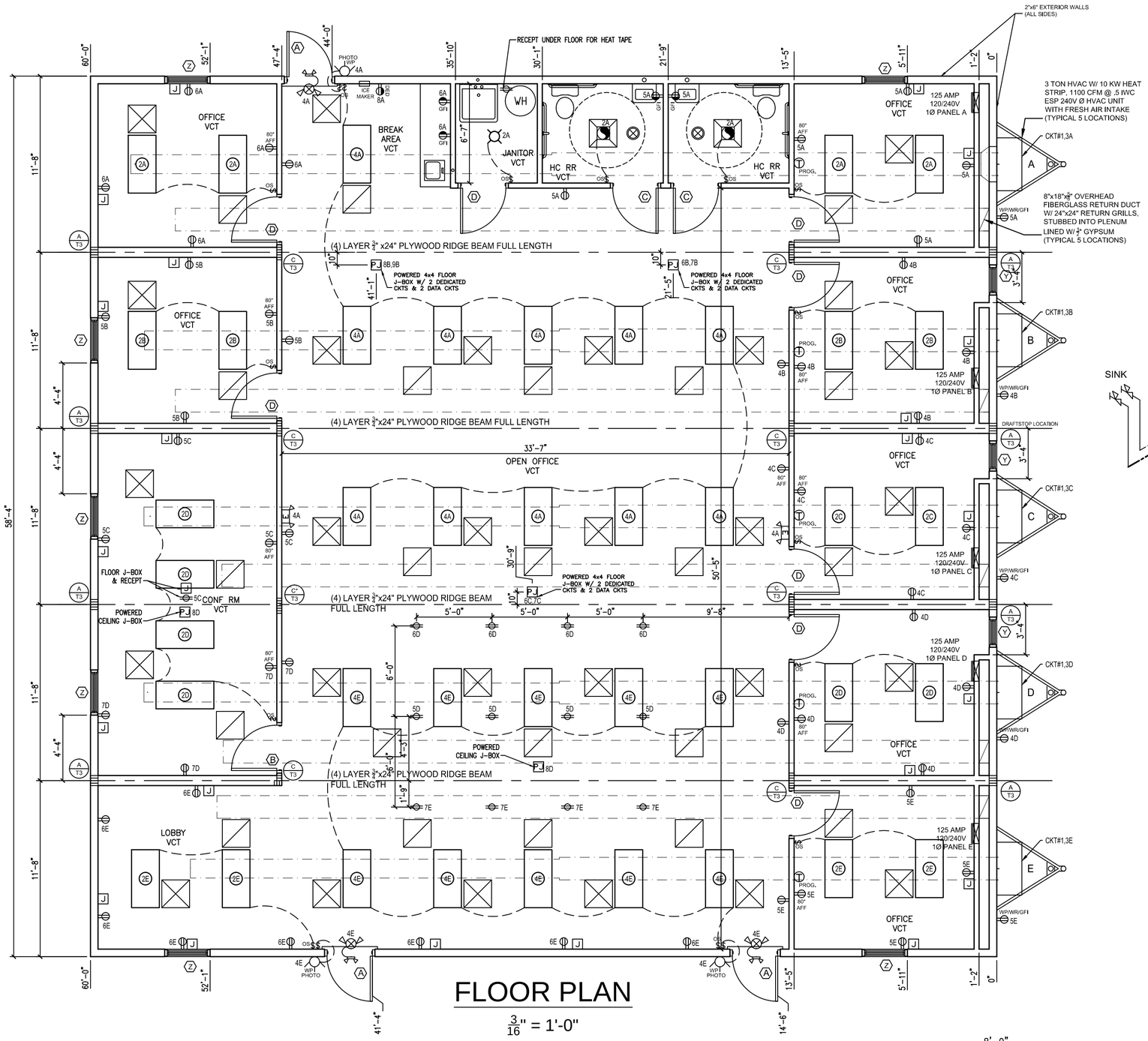

FLOOR PLAN

$\frac{3}{16}$" = 1'-0"

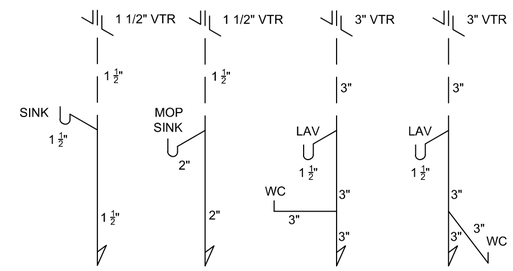

DWV RISER N-T-S

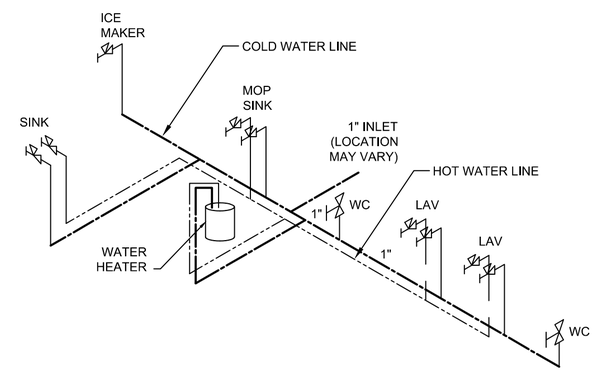

SUPPLY RISER N-T-S

SEE SUPPLY LINE NOTES

SYMBOL LEGEND

OS $	WALL MOUNT LIGHT SWITCH W/ OCCUPANCY SENSOR
$	WALL MOUNT LIGHT SWITCH
J	J-BOX IN WALL (NON POWERED)
	120 V DUPLEX RECEPTACLE
	120 V CEILING MOUNT DUPLEX RECEPTACLE
	RECESSED FLUORESCENT LIGHT FIXTURE W/ 2-32W BULBS
	100 CFM EXHAUST FAN / LIGHT COMBO CEILING FIXTURE W/ 60 WATT BULB
	24"X24" RETURN AIR CEILING REGISTER
	24"x24" SUPPLY AIR CEILING REGISTER
	6" Ø SUPPLY AIR CEILING REGISTER
	FLUSH MOUNT 120 / 240 V 1 Ø ELECTRICAL PANEL
T PROG.	WALL MT PROG. 7-DAY PROGRAMMABLE THERMOSTAT
	EXTERIOR REMOTE HEAD EMERGENCY LIGHT
	CEILING MT COMBO LIGHTED EXIT SIGN / EMERGENCY LIGHT 90 MINUTE CAPACITY
WP	60 W EXTERIOR PORCH LIGHT W/ PHOTO CELL, WEATHER PROOF
E	INTERIOR DUAL HEAD WALL MT EMERGENCY LIGHT 90 MINUTE CAPACITY
PJ	WIRED CEILING J-BOX IN CEILING (SEE ELEC. SCHEDULE)

RADCO APPROVED
Mar 15, 2016
RESOURCES, APPLICATIONS, DESIGN & CONTROLS, INC.
EASTERN NATIONAL REGION
5801 BENJAMIN CENTER DRIVE, SUITE 102
TAMPA, FL 33634
(813) 243-0370 - O | (813) 243-1314 - F
www.radcoinc.com
RADCO
THIRD PARTY DESIGN APPROVAL & INSPECTION AGENCY

REVIEWED BY
MICHAEL A FREY
Michael A. Frey
FLORIDA MODULAR PLANS EXAMINER
NO. SMP 37

LISTING AGENCY APPROVAL

THESE PRINTS COMPLY WITH THE FLORIDA MANUFACTURED BUILDING ACT OF 1979 CONSTRUCTION CODE AND ADHERE TO THE FOLLOWING CRITERIA.

CONST. TYPE	V(B)
OCCUPANCY	B
FLOOR LL	50 PSF
WIND VELOCITY	160 (ULT) MPH
FIRE RATING OF EXT. WALLS	0
ALLOWABLE NO. OF FLOORS	1
MANUFACTURER	TMS
PLAN NUMBER	TMS-2386
APPROVAL DATE	Mar 15, 2016
HVHZ ZONE	NO

RADCO

SUPPLY LINE NOTES:

1. SUPPLY LINE SIZING IS BASED ON AN ASSUMED AVAILABLE PRESSURE OF 60 PSI AT THE INLET LOCATION SHOWN, AFTER ANY DEDUCTIONS FOR PRESSURE LOSS DUE TO METER, TAP INTO MAIN, WATER PRESSURE REDUCING VALVES, SPECIAL EQUIPMENT SUCH AS BACKFLOW PREVENTOR, FILTER, SOFTENER, ETC. THIS AVAILABLE PRESSURE MUST BE VERIFIED PRIOR TO CONSTRUCTION. IF A BOOSTER PUMP IS NEEDED TO ACHIEVE REQUIRED PRESSURE THEN THE BUILDING OWNER IS RESPONSIBLE FOR DESIGN AND INSTALLATION OF PUMP SYSTEM.
2. SUPPLY LINE INLET(S) SHOWN ON THESE PLANS ARE ASSUMED TO EXTEND ONLY TO EXTERIOR WALL. ALL SERVICE SUPPLY LINES UP TO THE INLET(S) ARE DESIGNED BY OTHERS AND SITE INSTALLED UNLESS OTHERWISE SPECIFIED.
3. SUPPLY LINE SIZING MUST BE REDESIGNED IF THE BUILDING DOES NOT COMPLY WITH ANY OF THE ABOVE ASSUMPTIONS.
4. UNLESS OTHERWISE SPECIFIED ALL SUPPLY LINES ARE $\frac{3}{4}$" Ø MINIMUM. UNLESS OTHERWISE SPECIFIED ALL STUB-UPS ARE $\frac{3}{4}$" Ø TO FLUSH VALVE URINALS AND $\frac{1}{2}$" Ø TO ALL OTHER FIXTURES.
5. OPERATION OF EACH URINAL FLUSHOMETER VALVE AND FIXTURE SHALL NOT REQUIRE MORE THAN 25 PSI OF PRESSURE (12 GPM).

HOT WATER LINE

COLD WATER LINE

DOOR SCHEDULE

A	3680 - STEEL DOOR W/ 20"X30" - STEEL JAMB -SAFETY GLASS VIEW BLOCK - CLOSER (MOUNT TO DOOR & FRAME) - GRADE 1 LEVER LOCK W/ REM CORES LATCH GUARD
B	3680 - SOLID CORE - IMPERIAL OAK TIMELY OR REDI FRAME JAMBS PAINTED STD - LEVER PASSAGE
C	3680 - SOLID CORE - IMPERIAL OAK TIMELY OR REDI FRAME JAMBS PAINTED STD - PRIVACY LEVER
D	3680 - SOLID CORE - IMPERIAL OAK TIMELY OR REDI FRAME JAMBS PAINTED STD - KEYED LEVER

WINDOW SCHEDULE

Y	2460 - VERTICAL SLIDER INSULATED LOW-E TINTED GLASS WHITE VINYL FRAME - VINYL MINI BLINDS
Z	3660 - VERTICAL SLIDER INSULATED LOW-E TINTED GLASS WHITE VINYL FRAME - VINYL MINI BLINDS

COLUMN STUDS AND STRAPPING

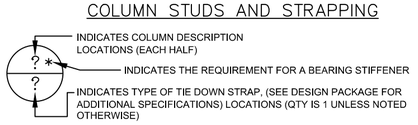

COLUMN DESCRIPTIONS

A - 2-2"x6" SYP #2 EACH HALF
B - 2-2"x4" SYP #2 EACH HALF
C - 3-2"X4" SYP #2 EACH HALF
D - 4-2"X4" SYP #2 EACH HALF

TIE DOWN STRAPPING

T1 = 20 GA x 1.5" GALV STEEL STRAP WITH (6) 0.148"Ø x 1.5" NAILS EACH END. 2- 26 GA x 1.5" GALV STEEL STRAPS MAY BE SUBSTITUTED OR 1- 20 GA x 1.5" STRAP.
T2 = 36 GA X 1.5" GALV. STEEL STRAP WITH (7) 14 GA OR 15 GA x $\frac{7}{16}$" x 1" PENETRATION STAPLES EACH END.
T3 = 0.035" (20 GA) x 1.25" HOT-DIPPED GALV. STEEL STRAP (G60 OR BETTER) COMPLYING WITH ASTM D3953-91, Fy=108 KSI, 4725 LB. MINIMUM ULTIMATE CAPACITY, FASTENED TO RIDGE BEAM WITH (17) 0.140Ø x 1.5" NAILS (Fyb= 90 KSI MIN.) AND EXTENDED CONTINUOUSLY BELOW FLOOR.

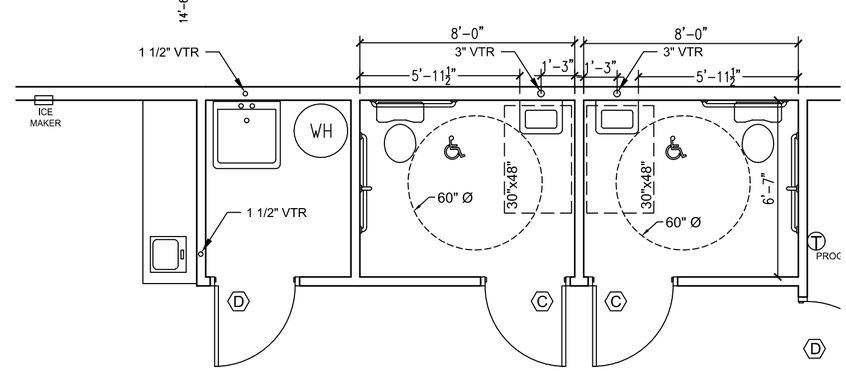

PLUMBING PLAN

$\frac{1}{4}$"= 1'-0"

REVISED: 3-4-16
REVISED: 3-9-16 X2

TITAN MODULAR
SYSTEMS, INC.
162 INDUSTRIAL DRIVE * ALMA, GA 31510
912-632-3344 (PH) * 912-632-3345 (FX)

DATE: 2-27-16	ENGINEER: KENNETH EARL DUNMON, P.E.
SCALE: $\frac{3}{16}$" = 1'-0"	
CODES: FL	
TMS-2386 A-E - 60'x60' - BUSINESS	
FLOOR PLAN	PAGE: 2 / 5

KENNETH EARL DUNMON
LICENSE
No 38457
STATE OF FLORIDA
PROFESSIONAL ENGINEER
03/14/16