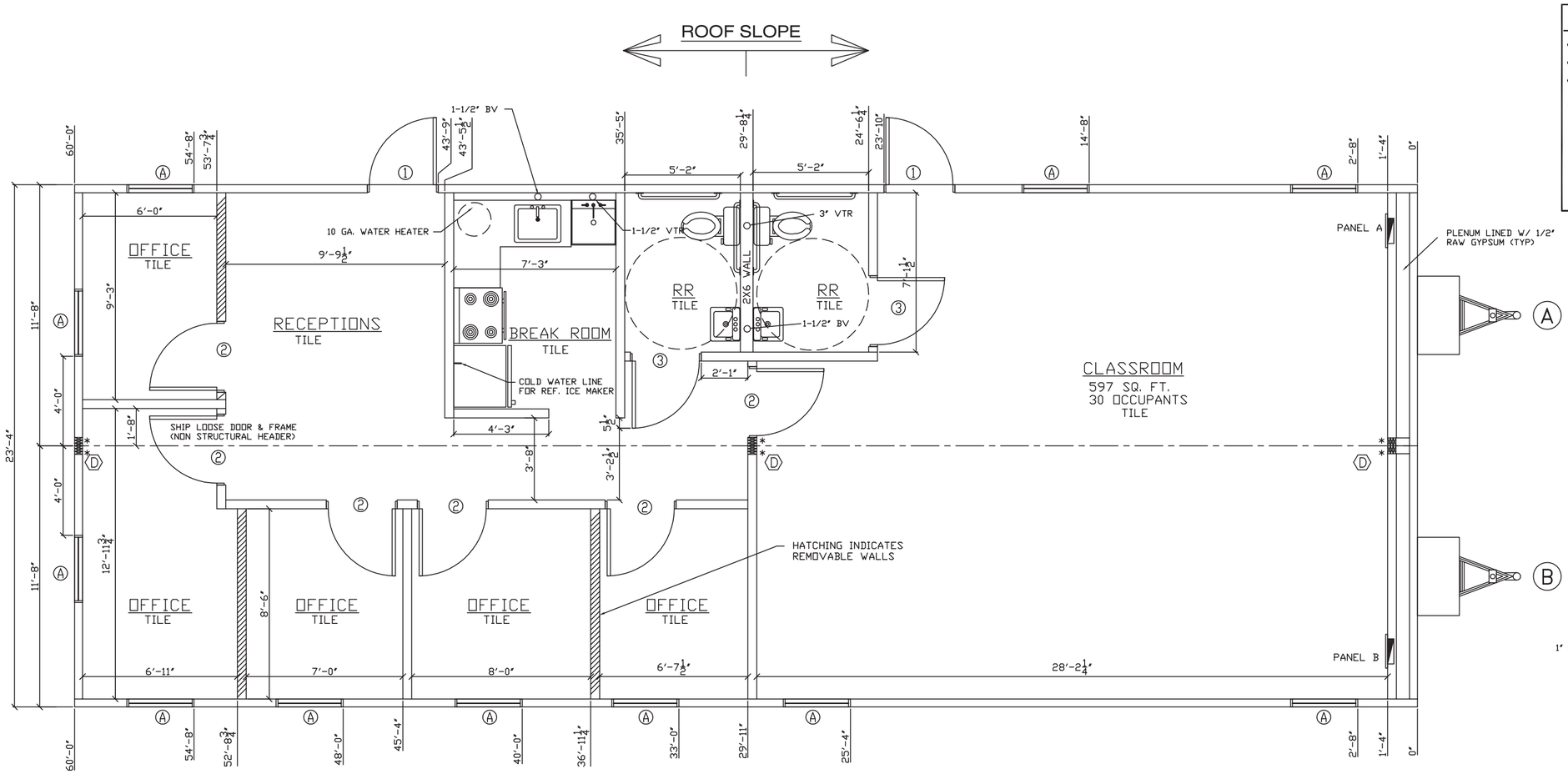


## FLOOR PLAN
SCALE: 1/4"=1'-0"

### COLUMN STRAPPING SCHEDULE

| | | | |
|---|---|---|---|
| A | (2) 2x4 SYP#2 (THIS HALF) | B | (2) 2x4 SYP#2 (EACH HALF) |
| C | (3) 2x4 SYP#2 (THIS HALF) | D | (3) 2x4 SYP#2 (EACH HALF) |
| E | (2) 2x6 SYP#2 (THIS HALF) | F | (2) 2x6 SYP#2 (EACH HALF) |

NOTES:
ALL COLUMN STUDS SHALL BE GLUED/NAILED TOGETHER
P.V.A. GLUE W/ 100% COVERAGE SHALL BE USED.

COLUMN STUDS SHALL NOT BE NOTCHED OR BORED.
INSTALL TWO (2) STEEL STRAPS AT EACH STUD OF EACH COLUMN
16 GA. x 7/16" CROWN x 1 1/4" STAPLES PER DOUBLE STRAP
STEEL STRAPS SHALL BE (2) 26 GA. x 1 1/2" FASTENED WITH (14)

END OR EQUAL, FROM RIDGE BEAM TO COLUMN AND COLUMN TO FLOOR.

* = BEARING STIFFNER

### RIDGE BEAM SPECS

| UNIT | LOCATION | LAYERS |
|---|---|---|
| A | A–SIDEWALL | 2 LAYERS 3/4"x 24" PLYWOOD |
| | A–B | 4 LAYERS 3/4"x 24" PLYWOOD |
| B | B–A | 4 LAYERS 3/4"x 24" PLYWOOD |
| | B–SIDEWALL | 2 LAYERS 3/4"x 24" PLYWOOD |

APA RATED PLYWOOD, EXP.1, STRUCT. 1,
5 PLY, 5 LAYER, 48/24

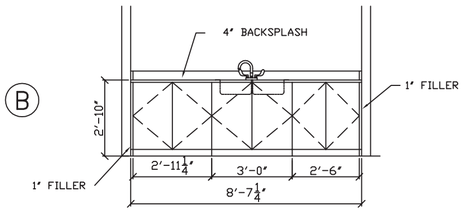


## CABINET DETAIL
SCALE 1/4"=1'-0"

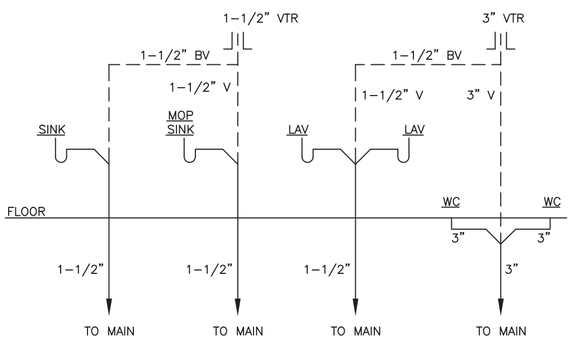


## WASTE SCHEMATIC
N.T.S

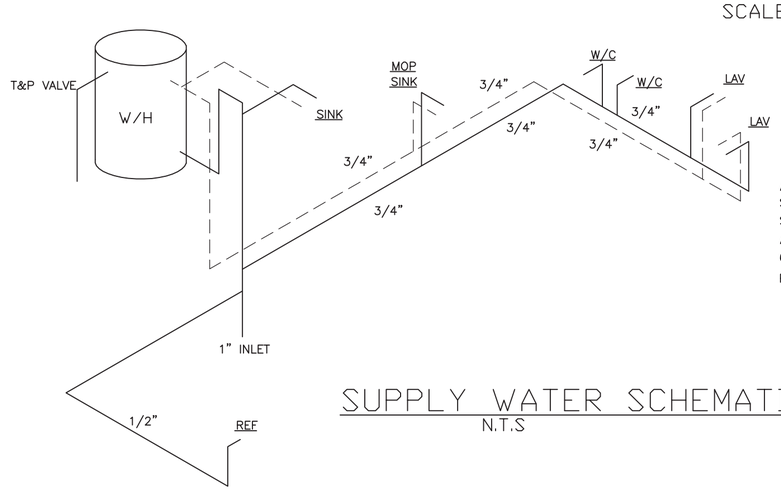


ALL SUPPLY LINES SHALL BE 3/4" AND ALL STUB–UPS SHALL BE 1/2" UNLESS OTHERWISE SPECIFIED. SUPPLY LINE SIZING IS BASED ON AN ASSUMED AVAILABLE PRESSURE OF 46 TO 60 PSI AT MAIN INLET AND SHOULD BE VERIFIED PRIOR TO CONSTURCTION.

## SUPPLY WATER SCHEMATIC
N.T.S

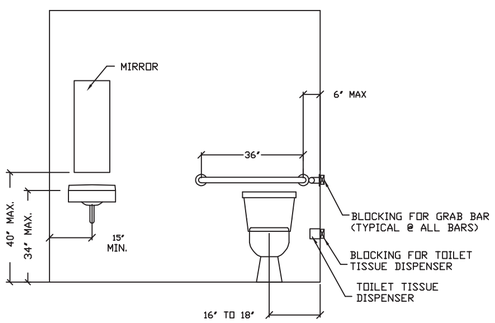


FRONT ELEVATION

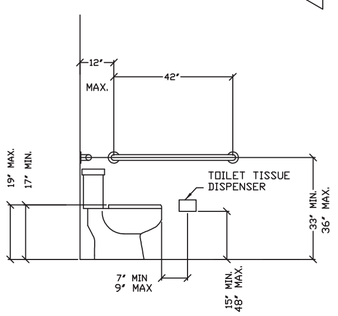


SIDE ELEVATION (TOILET)

SHOWN FOR REFERENCE ONLY

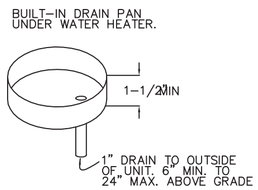


DRAIN PAN DETAIL N.T.S.

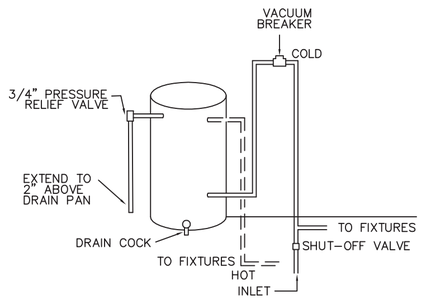


WATER HEATER DIAGRAM N.T.S.

VALID
Apr 7 2014
JAMES E. BRADLEY
LICENSE
No. 16695
STATE OF
FLORIDA
PROFESSIONAL ENGINEER

JAMES BRADLEY P.E.
CONSULTING ENGINEER
212 FOX TRAIL
PARKESBURG, PA. 19365

THIRD PARTY: HWC
HILBORN, WERNER, CARTER & ASSOCIATES
1627 SOUTH MYRTLE AVE.
CLEARWATER, FLORIDA 33756

LISTING AGENCY APPROVAL
THESE PRINTS COMPLY WITH THE FLORIDA MANUFACTURED BUILDING ACT OF 1979 CONSTRUCTION CODE AND ADHERE TO THE FOLLOWING CRITERIA.

| | |
|---|---|
| CONST. TYPE | V–B |
| OCCUPANCY | E–EDUCATIONAL |
| ALLOWABLE NO. OF FLOORS | 1 |
| RISK CATEGORY | II |
| WIND VELOCITY (ULT) | 140 MPH |
| WIND VELOCITY (ASD) | 108 MPH |
| FIRE RATING OF EXT. WALLS | 0 |
| PLAN NO. | 1578–4848F |
| ALLOW. FLOOR LOAD | 40/50/100 |
| APPROVAL DATE | 4-10-14 |
| MANUFACTURER | SMM |
| HIGH VELOCITY HURRICANE ZONE | NO |

IWC
MUR–261

PROJECT HISTORY
START DATE: 03/21/14
Customer Changes: 04/02/14
3rd Party Comments: 04/09/14

MBSI
SEASIDE COMMUNITY CHARTER SCHOOL
SERIAL # 18680 A–B
FLOOR / PLUMBING PLAN

Southeast Modular Manufacturing Corporate Office
2500 INDUSTRIAL STREET
LEESBURG, FLORIDA 34748

| | |
|---|---|
| DRAWN BY: | CH |
| CHECKED BY: | JB |
| DATE: | 03/21/14 |
| SCALE: | 1/4"=1'-0" |
| HWC# | 1578–4848F |
| SERIAL# | 18680 A–B |
| SHEET: | 3 |
| OF | 5 SHEETS |

PDF created with pdfFactory trial version www.pdffactory.com